Weller®	PLATO® TIP
—	MS-0105
—	MS-0201
—	MS-4140
LT1	MS-4120
LT1L	MS-4110
LT1LX	MS-4101
LT1S	MS-4100
LT1SLX	MS-4125
LT4	MS-5160
LTA	MS-3200
LTAS	MS-4150

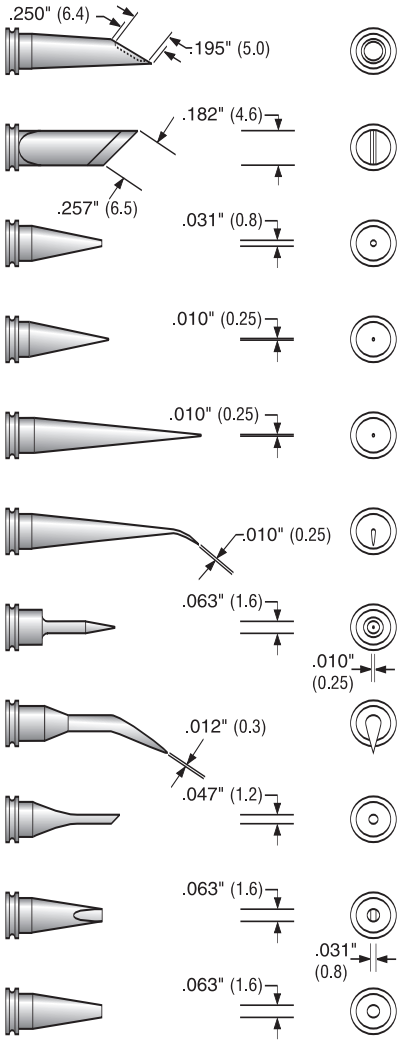

Tip samples are available. Custom tip designs on request.

Weller®	PLATO® TIP
LTB	MS-3300
LTC	MS-3400
LTCS	MS-4160
LTD	MS-3600
LTGW	MS-0100
LTH	MS-3110
LTHX	MS-3101
LTK	MS-3150
LTL	MS-3250
LTM	MS-3450
LTS	MS-4130

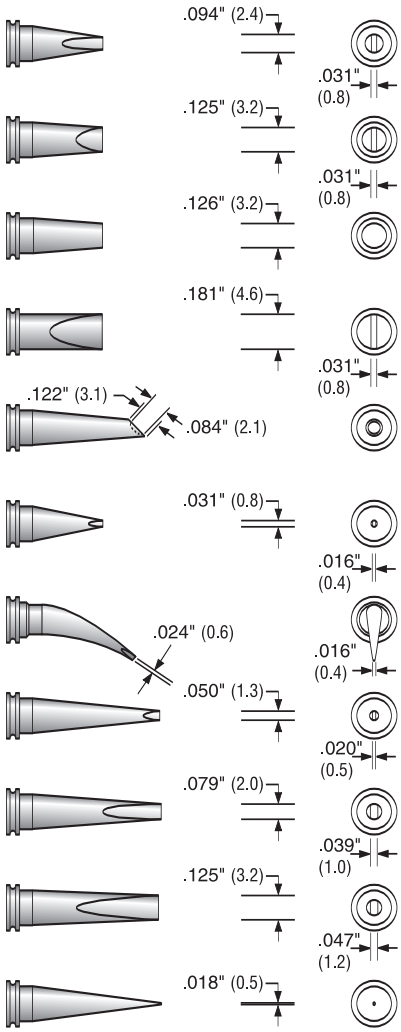

All dimensions shown are before tinning and are subject to manufacturing tolerances.

WELLER®

Soldering Station • WSP 150

Weller®	PLATO® TIP
LHT-D	MH-3200
LHT-E	MH-3400
LHT-F	MH-3600

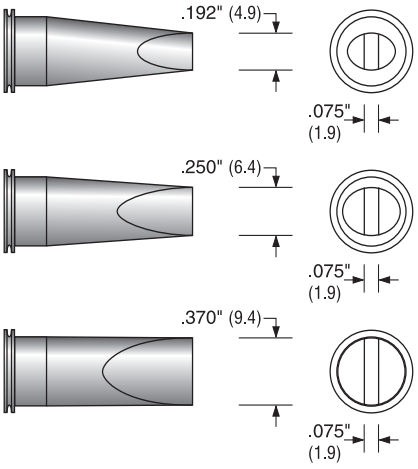

All points are .075" (1.9) thick unless otherwise noted.

( ) = mm

Tip samples are available. Custom tip designs on request.

All dimensions are shown before tinning and are subject to manufacturing tolerances.